MATLAB and Simulink Italian Academic Forum

Insegnare con MATLAB e Simulink

Prof. Agostino De Marco
Università degli Studi di Napoli Federico II
Design of Aircraft and Flight technologies (DAF) research group – www.daf.unina.it

© 2021 The MathWorks, Inc.

Dinamica e Simulazione del Volo (Flight Dynamics & Simulation) Laurea Magistrale Ingegneria Aerospaziale

- Dynamics of atmospheric flight, fixed-wing airplanes
- Mathematical physics applied to the 6DoF motion in atmosphere of a rigid body, under the action of weight, propulsion, and aerodynamics
- Elements of rigid body kinematics
- Elements of airplane aerodynamics, non-linear aerodynamic models, tailored to the needs of flight simulation
- Elements of propulsion, table lookup thrust models
- Analysis of aircraft open loop dynamics (longitudinal and lateral-directional modes of airplanes)
- Saveral homework assignments, based on Matlab/Simulink
- Homework reports are mandatory for exam maximum grades

Dinamica e Simulazione del Volo (Flight Dynamics & Simulation)
Laurea Magistrale Ingegneria Aerospaziale

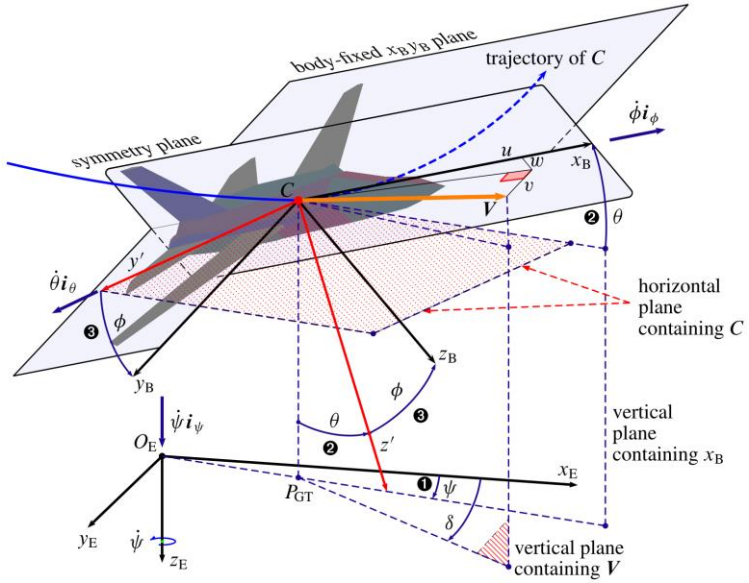

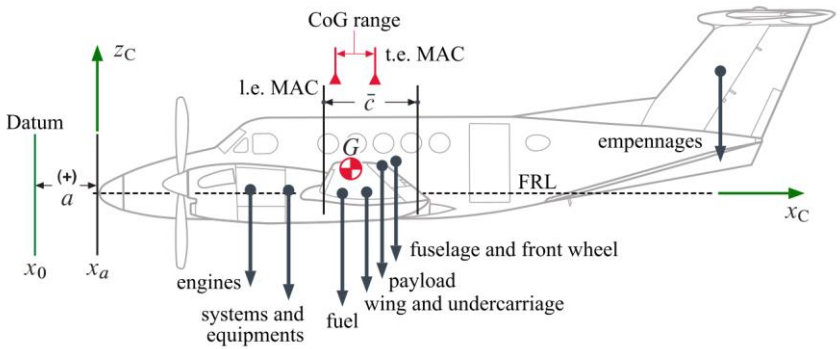

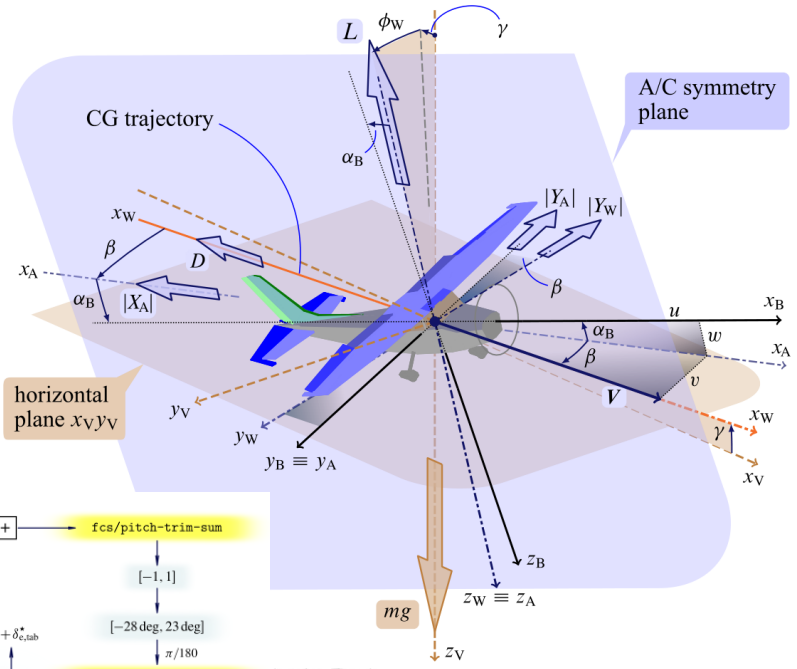

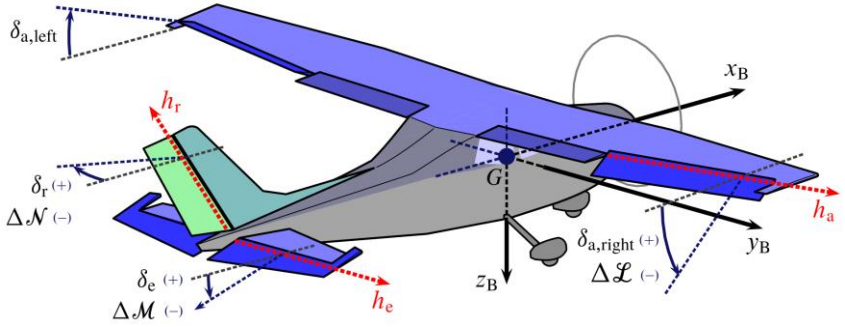

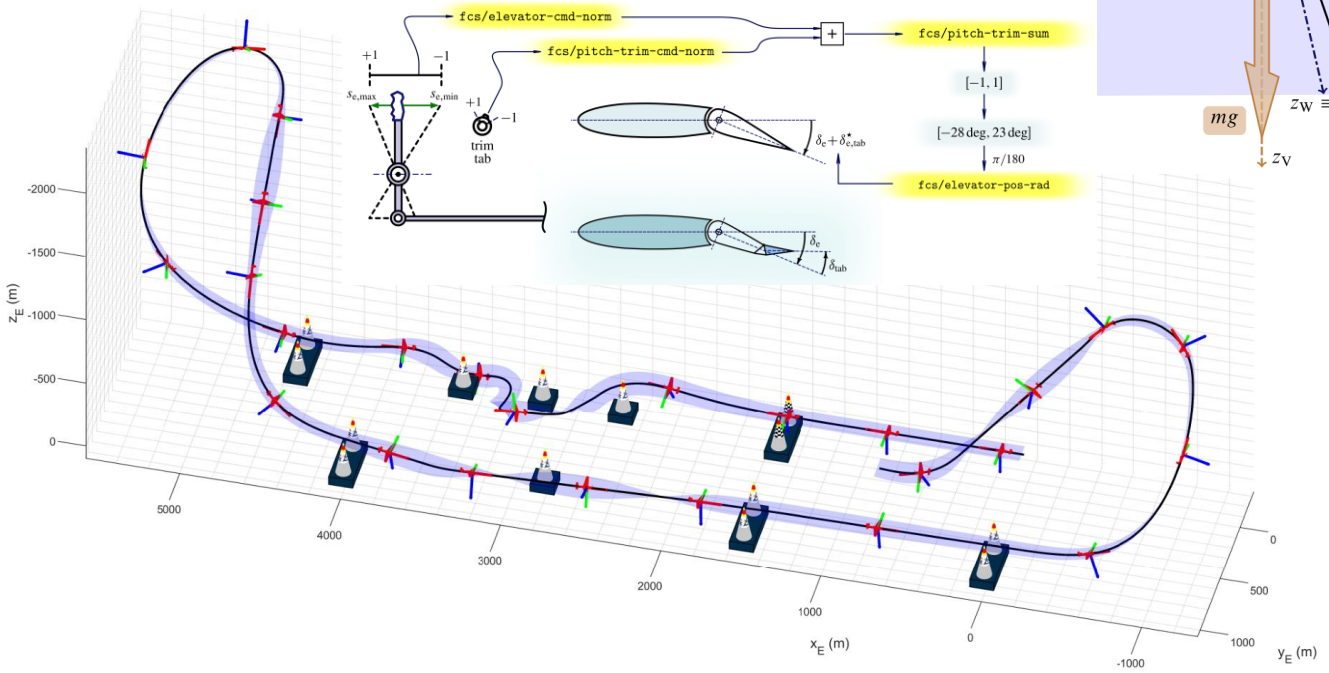

In che modo MATLAB e Simulink sono stati usati nel corso

- Massive use of Aerospace Toolbox & Blockset
- Promoting advanced Matlab data structures and object-oriented programming (several examples passed to students)
- Visualization of solid body motion in a 3D scenario
- Interface with FlightGear desktop flight simulation app
- Pre- and post-processing of flight data
- Advanced management of *flight sim datapacks* (lookup tables)
- Reproduce several exercises both in Matlab and in Simulink
- Analysis of LTI systems: aircraft dynamic response to perturbations of nominal equilibrium flight conditions

Benefici/valore aggiunto nell'uso di MATLAB e Simulink

- Flipped classroom approach. Very effective in a video conferencing/synchronous learning environment (Microsoft Teams), with polls as main pre-lesson, fast screaning tool
- Matlab/Simulink provide a standard de facto set of tools to students, that gain a direct application experience of all theoretical aspects
- Students are given specific competences in flight data analysis, flight simulation, aircraft aerodynamic and dynamic modelling
- Thanks to multiple programming paradigms supported by the Matlab language, aerospace students get to explore several possibilities in software design, including OOP

Risultati ottenuti, considerazioni personali

- More than 90% of students that choose a complete set homework assignments get final grades in the range 26/30 to 30/30 cum laude
- Teaching success story: In 2020 the course started in March (time of pandemic outbreak in Italy) and ended in June.
  - Delevered entirely via Teams
  - A large group o students offered to work concurrently to a comprehensive homework report LaTeX project hosted on Overleaf (https://overleaf.com), synchronized with a GitHub repository
  - A companion GitHub repository was created with all Matlab sources and Simulink models produced for the assignments. Matlab scripts were designed to copy significant plots and images into the LaTeX repository
  - All exercises were thoroughly revised and are now included in a draft of a textbook on Aircraft Flight Dynamics

Risultati ottenuti, considerazioni personali
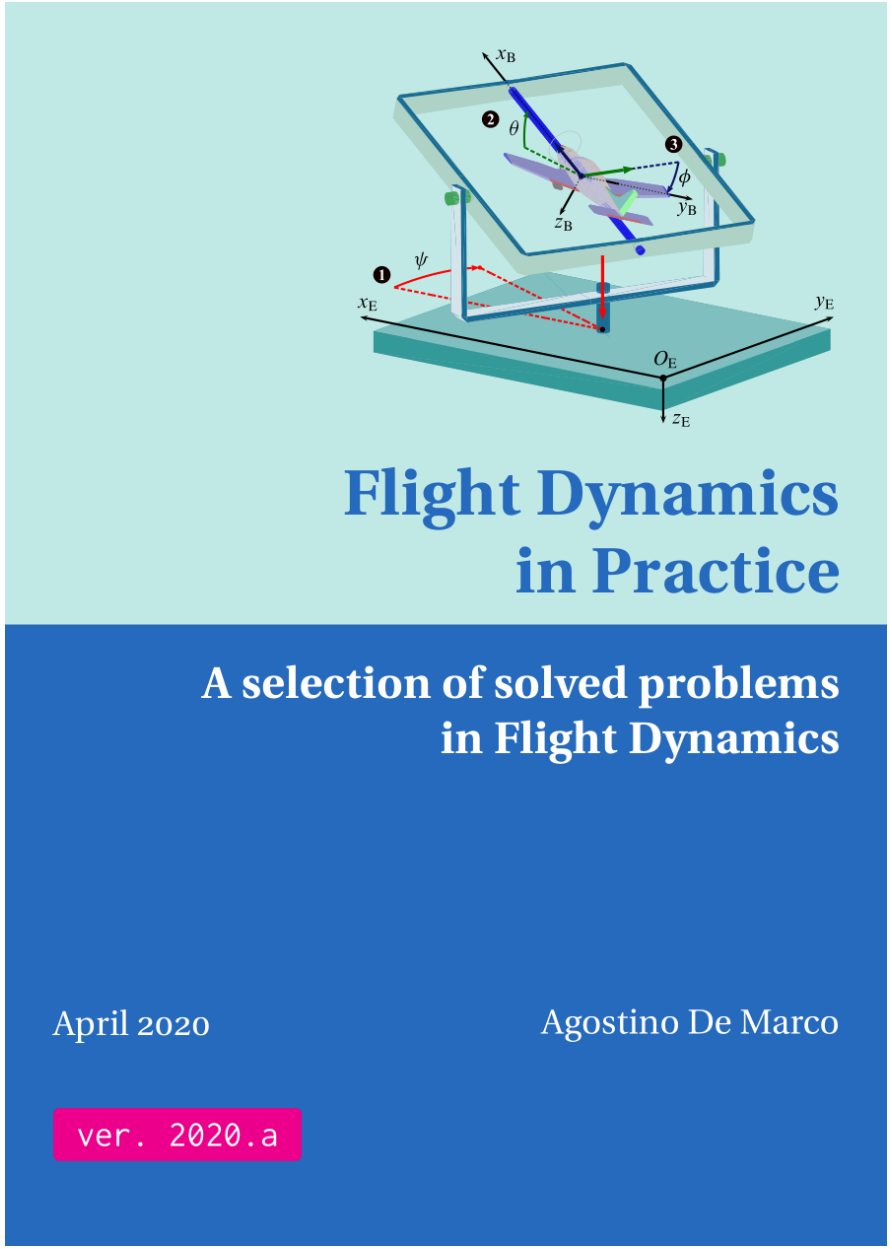
- More than 300 pages of solved problems in Matlab/Simulink
- Including plots and schemas
- Appendices with listings of custom functions and classes